COANDA	ASSEMBLY DRAWING	SABIANA

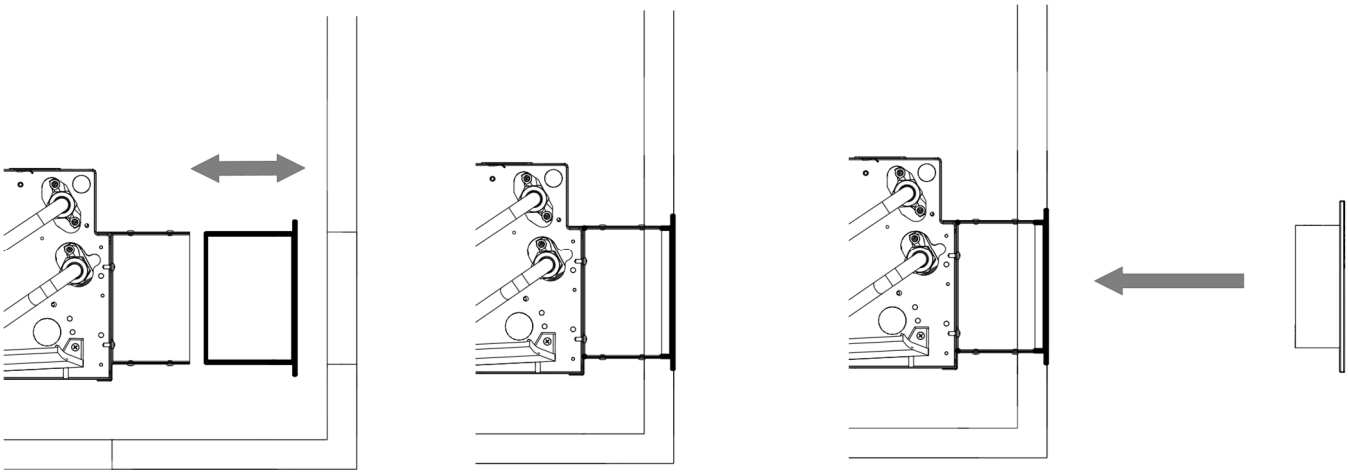

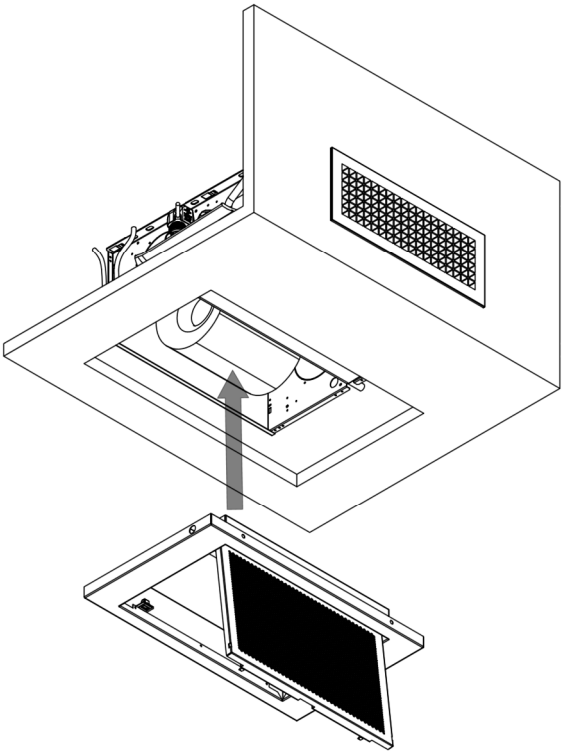

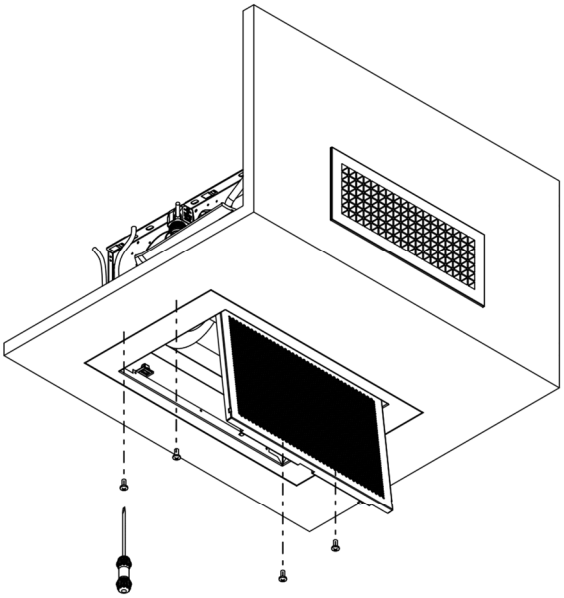

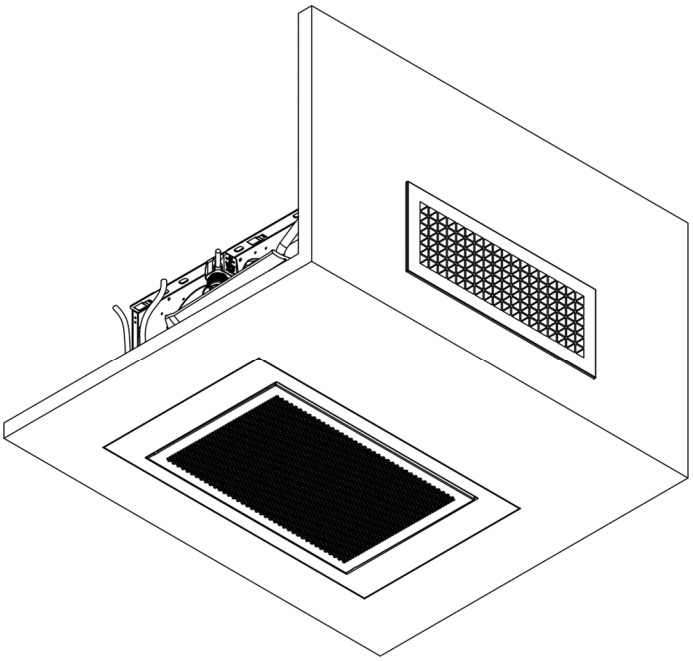

COANDA	ASSEMBLY DRAWING	SABIANA

Dimension

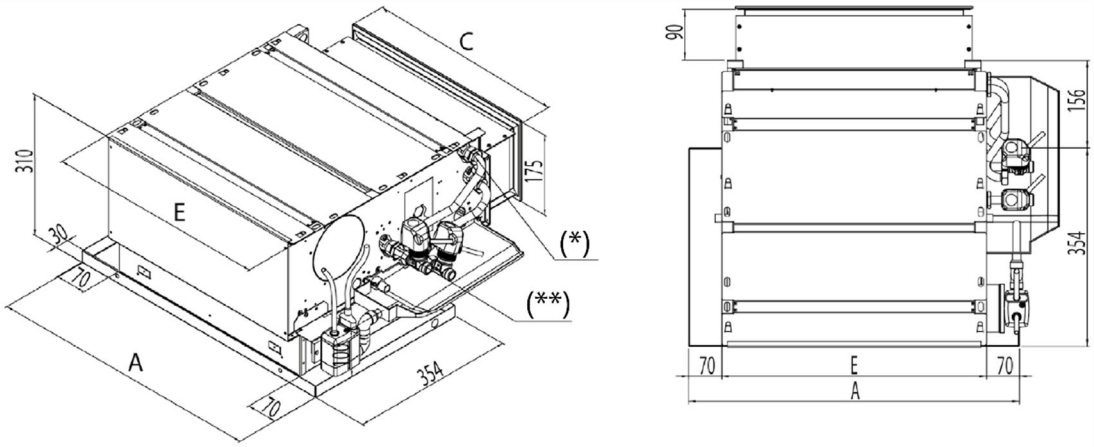

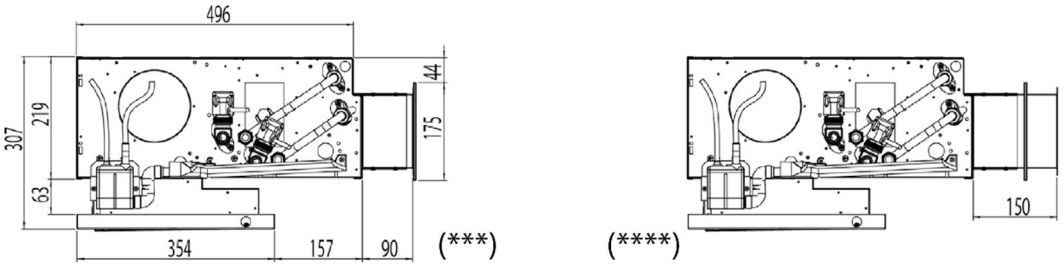

(*) = Uscita acqua	(*) = Water outlet
(**) = Entrata acqua	(**) = Water inlet
(***) = Plenum minima estensione	(***) = Min. Plenum extension
(****) = Plenum massima estensione	(****) = Max. Plenum extension

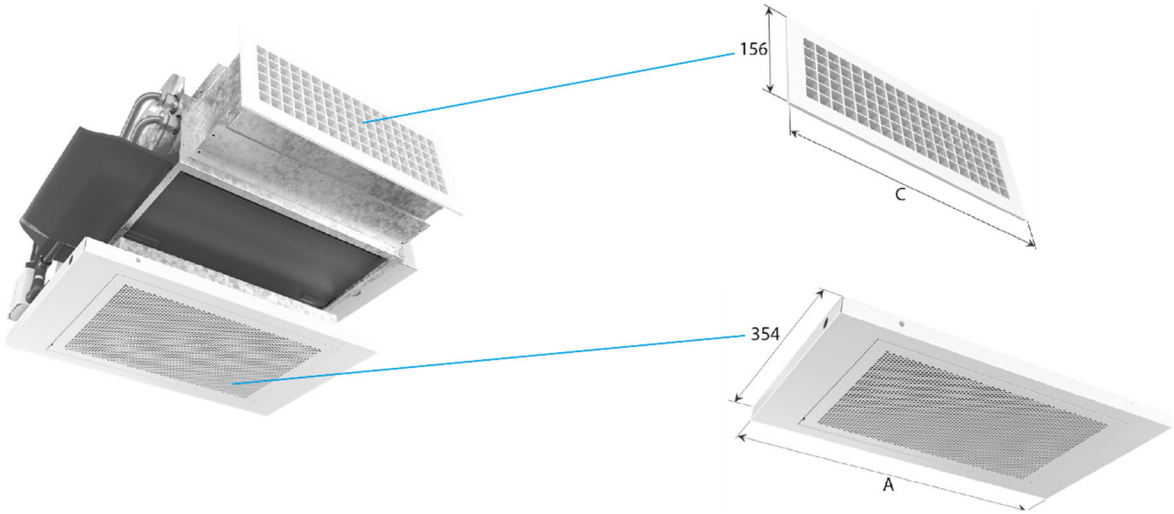

Mod.	1	2	3
A	592	970	1192
E	454	884	1099
C	425	825	1025